DINCEL STRUCTURAL WALLING

INDOOR AIR QUALITY, CONDENSATION, MOULD & MILDEW

DINCEL & INDOOR AIR QUALITY (IAQ) [7,8,9,10]

In recent years Indoor Air Quality (IAQ) has become a serious concern, a significant contribution for IAQ can only be achieved if water, moisture, external pollutants and pests are prevented from entering into human living environments.

The main factors affecting IAQ are particulates, gases and biological pollutants. Particulates consist of a great variety of materials transferred through the air which is often small enough to be inhaled deep into the lungs. These include plumbing vents, industrial process source pollutants, motor vehicle exhausts, dirt and dust from outdoor sources and those generated indoors by human activities (tobacco smokes, stoves, fire places, cleaning agents, pesticides, adhesives etc). Outdoor air with high pollutants (e.g. nearby industrial areas) that enters a building can also be a source of indoor pollution. The impervious Dincel-Wall prevents outdoor contaminants from entering indoors because of impervious polymer skins. (Refer certification by CSIRO Australia **(Download – Waterproof Walls)**.

Dincel-Wall consists of permanent waterproof polymer formwork encapsulating concrete filling to form a monolithic concrete wall. The permanent polymer formwork provides an impervious barrier for water, moisture, and external contaminants to enter into the buildings. Conventional in-situ concrete walls have a variable degree of imperviousness but they consist of cracks and mandatory joints. Materials such as concrete, fibre-cement and gypsum boards are porous and will absorb water; hence the development of mould and mildew are unavoidable **(Download – Leaky Buildings – Are Fibre-Cement Sheets Suitable)**. Dincel-Wall is a joint and crack free wall thus the imperviousness level of Dincel-Wall is not comparable to any conventional walls. **(Download – Breathable Wall/FAQ/Sustainability/Question 11)**.

Off-gassing associated with building materials are generally referred to as **volatile organic compounds** (VOC's). These include a wide variety of solvents, formaldehyde and many other manmade and natural materials.

Dincel-Wall material consists of heavy metal free non-toxic organic compounds (lead, cadmium, mercury, tin, antimony, zinc free stabiliser) and also does not contain any plasticizers. Therefore the "off-gassing" from the Dincel-Wall would be significantly less than the off-gassing associated with conventional building products such as; natural wood, laminated wood, particle board, various wall coverings etc.

The Green Building Council – Green Star Rating for total volatile organic compound (TVOC) Specific Area Emission Rate is 0.5 mg/m2/hour at 30 days after production of a construction material. The tested TVOC Rate for DINCEL-POLYMER < 0.01 mg/m2/hour at 30 days which is below the detection level of modern testing equipments.

The certificate on the following page is proof that Dincel-Polymer is VOC safe.

Various insects, mites, ticks, protozoans, bacteria and fungi (mould, mildew and yeast) make up the biological category of IAQ pollutants. This group also includes particulates and gases as well. Biologicals interact so dramatically, directly, and destructively with buildings and their inhabitants that they have earned the right to be called the most potent of all pollutants. Even more significant, is the fact that the biologicals can be tied to all of the human responses that we associate with "**sick building syndrome**". This is not true of the other pollutants. Non-biological pollutants, such as particulates or gases can stimulate specific human symptoms but not all of them. Beside the bacterial, fungal (mould, mildew and yeast), and viral disease causing organisms, there are a number of these organisms that cause allergic response in sensitive individuals. Legionella bacteria, lung disease causing bacteria, E-coli, Salmonella species, and the typical skin bacteria such as Staphylococcus and Pseudomonas are all part of the biologicals found in buildings. Each of these organisms has specific life styles and habitats in buildings and is the reason for the growing concern of occupants in today's building marketplace. **The direct relation between biological pollutants, IAQ and building walls are fungi (mould and mildew) and termites**.

DINCEL CONSTRUCTION SYSTEM PTY LTD ABN. 78 083 839 614
101 QUARRY ROAD, ERSKINE PARK, NSW 2759, AUSTRALIA
TEL: +61 2 9670 1633 | FAX: +61 2 9670 6744
EMAIL: CONSTRUCTION@DINCEL.COM.AU | WWW.DINCEL.COM.AU

DINCEL STRUCTURAL WALLING

cetec

Consulting Enterprises in Technology

SCIENTIFIC CONSULTANTS IN RISK ASSESSMENT AND MANAGEMENT, PRODUCTS, PROCESSES, OH&S, ENVIRONMENT

Emission Test Certificate

Wednesday November 14th, 2007

Supplier: Dincel Construction Systems (Level 3, 7K Parkes Street, Parramatta NSW 2150)

Product Description: Polymer Formwork

Date Tested: October 2007

Test Method: ASTM D5116-97 "Standard Guide for Small-Scale Environmental Chamber Determinations of Organic Emissions from Indoor Material/Products".

Emission Data:

Dincel Polymer Formwork	Total Volatile Organic Compound Specific Area Emission Rate $mg/m^2/hr$
Newly Manufactured (24 hours)	0.02
Aged (ca. 30 days)	<0.01 (below detection limit)

This product can be classed as low VOC-emitting. The material emissions are less than the recognised threshold of 0.5 $mg/m^2/hr$; e.g. "Green Star".

When this product is used in accordance with the technical specifications for a building the resulting airborne total volatile organic compound concentration can be expected to be less than 0.5 mg/m^3 acceptable limit specified by the scientific literature.

Dr. Vyt Garnys
PhD, BSc(Hons) AIMM, ARACI, ISIAQ
ACA, AIRAH, FMA
Managing Director and Principal Consultant

CV071106

Cetec Pty Ltd
ABN 44 006 873 687

2/27 Normanby Road,
Clayton North, Victoria 3168
AUSTRALIA

Telephone: (03) 9544 9111
Facsimile: (03) 9544 9122
International: (+613)

Email: info@cetec-foray.com.au
www.cetec-foray.com.au

DINCEL CONSTRUCTION SYSTEM PTY LTD ABN. 78 083 839 614
101 QUARRY ROAD, ERSKINE PARK, NSW 2759, AUSTRALIA
TEL: +61 2 9670 1633 | FAX: +61 2 9670 6744
EMAIL: CONSTRUCTION@DINCEL.COM.AU | WWW.DINCEL.COM.AU

DINCEL STRUCTURAL WALLING

CONDENSATION, MOULD AND MILDEW

The reader is recommended to read **(Download – Part 2 – Energy Efficiency for Building Operational Use)** for the following.

Mould and mildew are fungi that grow on surfaces of objects, within pores and in deteriorated materials.

Mould and mildew are avoided by minimising internal condensation. The ingredients for condensation are essentially one or more of the following:

- The presence of moisture levels which are too high. Moisture levels within buildings are often higher than outdoors. The reasons for these are:
  - Occupants' activities are mainly bathing and drying clothes.
  - Rain/ground water penetrating into the building's interior (i.e. inadequate waterproofing and damp proofing).
  - The hygroscopic properties (the tendency to absorb and retain moisture, i.e. having building materials such as timber, plain concrete, brick, block, fibre cement) of building surfaces allowing sufficient moisture to accumulate.

  Most of the condensation problems occur within the first 12 months of construction. The building walls/floors may absorb rainwater/moisture before finalisation of the building fabric. The walls and floors that are made out of concrete consist of at least 11% water which dries out in time. The building façade walls without proper vapour barriers (not painting systems) will also continue to absorb externally available moisture or even rainwater.

- The temperature in the interior face of the building fabric (particularly single skin walls) may become cold enough (i.e. approaching outside cold winter temperature) to fall below the dew point of the indoor air and condensation will occur.

  Condensation may occur if the interior wall surfaces have inadequate vapour barrier resistance where the building fabric is colder and may approach outside temperature. Conventionally, the exterior face of the building fabric is recommended to be insulated to allow the building fabric to be heated from the inside. Maintaining temperature above the dew point will avoid condensation. This may be difficult as in buildings that are not occupied all the time and heated for only short periods in the evenings, there is not sufficient time to increase the temperature of the wall. Heating should be throughout the building, not just in the living room or bedrooms, thus the cost of maintaining such a temperature is excessive.

  Dincel-Wall therefore recommends using interior insulation to control loss of heat in heating conditions and offers a minimum 2mm thick vapour barrier on both its faces simultaneously.

- Uncontrolled flow of water vapour from a source to a region of cold temperature. In climates where summer humidity is high, condensation can be a summer problem, particularly if mechanical cooling is in use. Water vapour may condensate on the outside of the building if it is inadequately insulated or contains thermal bridges (i.e. metal studs, exposed slab edges) and is cooled from the inside. As in the winter case, water vapour may penetrate the building fabric, this time from the outside, and condense on cold surfaces.

DINCEL CONSTRUCTION SYSTEM PTY LTD ABN. 78 083 839 614
101 QUARRY ROAD, ERSKINE PARK, NSW 2759, AUSTRALIA
TEL: +61 2 9670 1633 | FAX: +61 2 9670 6744
EMAIL: CONSTRUCTION@DINCEL.COM.AU | WWW.DINCEL.COM.AU

HOW TO AVOID CONDENSATION

This issue is comprehensively covered in the Dincel website – Frequently Asked Questions, Sustainability Section, Question Numbers 11 and 12. However, the following are the basic principles to avoid condensation.

The easiest way to avoid condensation is simply to prevent moist air coming into contact with cold surfaces. This may involve controlling a number of factors that cause condensation. In addition, as building designers have little control over the operation or use of the building, some integral fail-safe strategies should be considered. Appropriate steps are:

- Provide improved ventilation to reduce or control the relative humidity and internal vapour pressures and hence reduce dew point gradients. Reduce quantity of moisture produced and/or remove it at the source to control the relative humidity and vapour pressure. Bathrooms, laundries and kitchens require mechanical ventilation. Architectural designs should incorporate natural cross ventilation in general.
- Provide insulation to assist in warming cold surfaces by controlling the loss of heat through the wall.
- Avoid thermal bridging within the wall construction causing cold wall surfaces. Use Dincel-Wall, no metal studs and protects exposed slab edges, wall faces.
- Provide vapour barrier on the warm side of the wall assembly i.e. in winter climates inside face, in summer climates outside face. Dincel-Wall provides vapour barriers on both its faces.

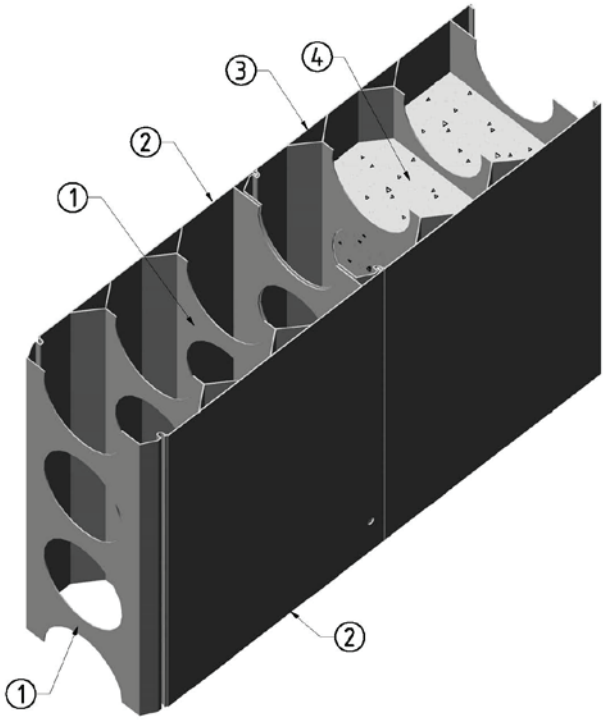

① Non-metal connectors and exposed slab edges protection by Dincel-Polymer **AVOIDS THERMAL BRIDGING.**

② Impervious Dincel-Polymer provides building code requirement of **VAPOUR BARRIERS** for both faces.

③ Dincel-Crack Inducers ensures – No contraction or expansion joints are required, i.e. **joint free walls.** Impervious permanent Dincel-Polymer skins together with joint free concrete walls **AVOID AIR LEAKAGE.**

④ A minimum of 200mm thick concrete is desirable for an effective **THERMAL MASS** provision.

The positions of additional insulation (other than aerated light weight concrete) must be done selectively. Incorrect use of insulation for type and position may cause comfort liability and condensation, mould and mildew problems. Refer to terminology section for insulation.

DINCEL CONSTRUCTION SYSTEM PTY LTD ABN. 78 083 839 614
101 QUARRY ROAD, ERSKINE PARK, NSW 2759, AUSTRALIA
TEL: +61 2 9670 1633 | FAX: +61 2 9670 6744
EMAIL: CONSTRUCTION@DINCEL.COM.AU | WWW.DINCEL.COM.AU

DINCEL STRUCTURAL WALLING

RECOMMENDED DETAILS TO AVOID CONDENSATION

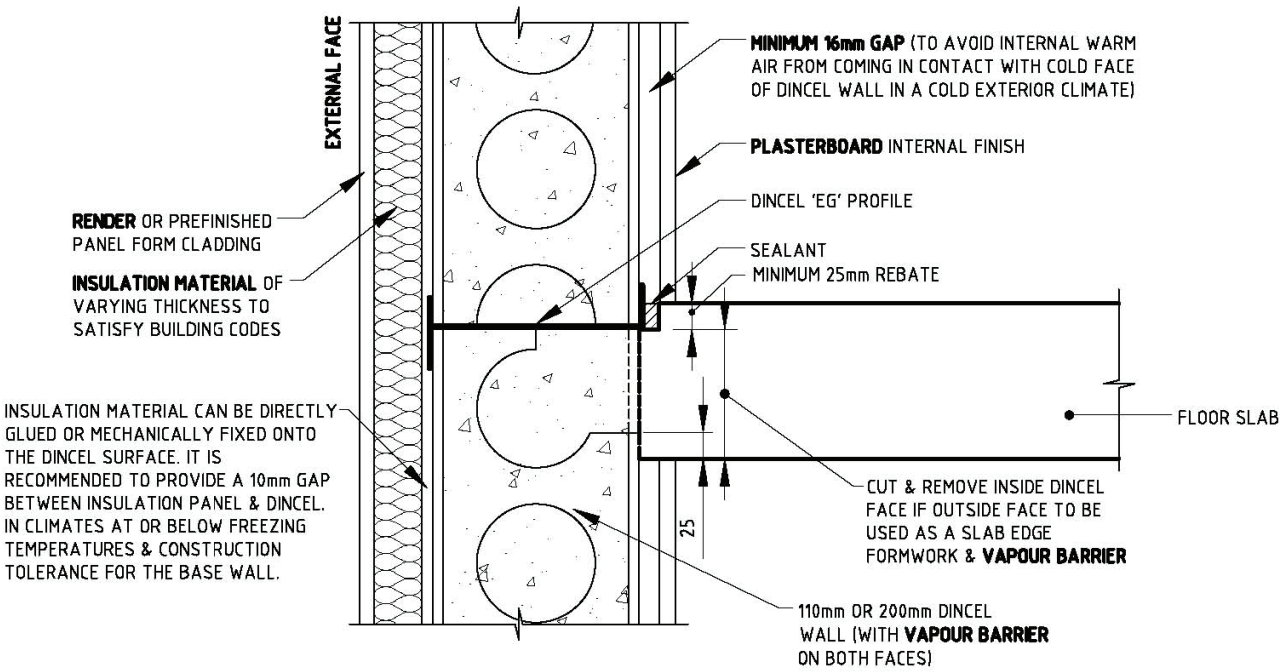

FACADE WALL DETAILING – CONCRETE FLOOR

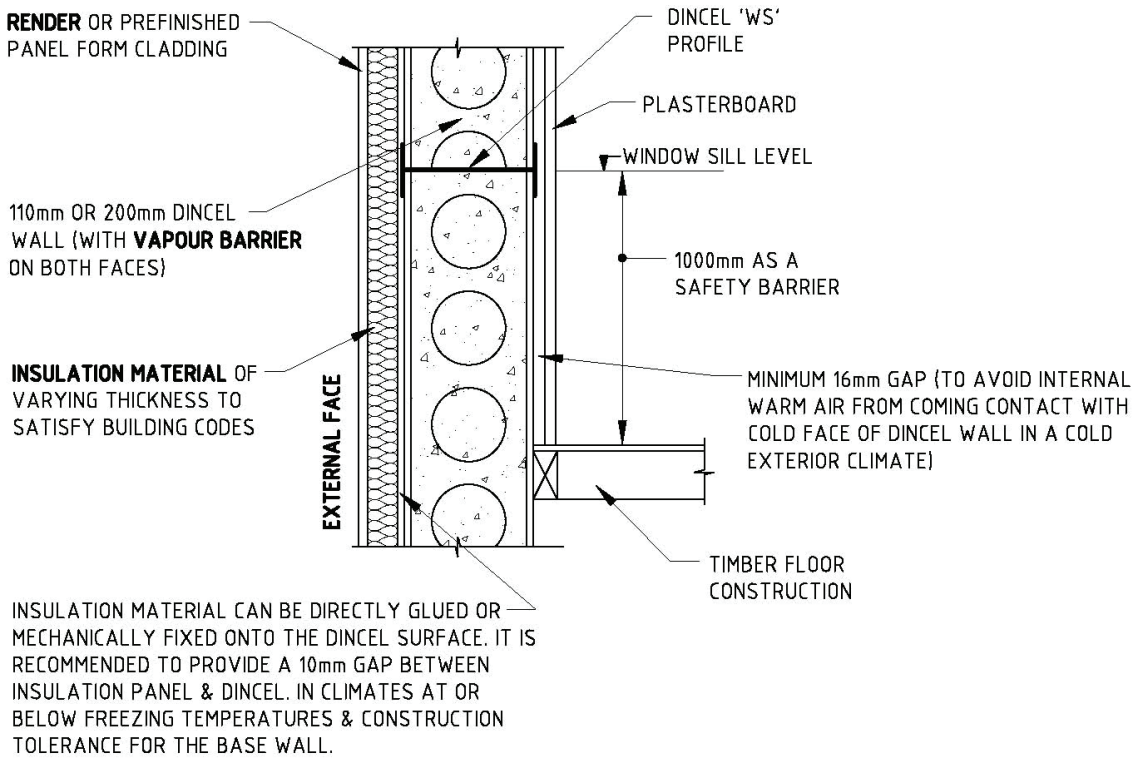

FACADE WALL DETAIL – TIMBER FLOOR

DINCEL CONSTRUCTION SYSTEM PTY LTD ABN. 78 083 839 614
101 QUARRY ROAD, ERSKINE PARK, NSW 2759, AUSTRALIA
TEL: +61 2 9670 1633 | FAX: +61 2 9670 6744
EMAIL: CONSTRUCTION@DINCEL.COM.AU | WWW.DINCEL.COM.AU

DINCEL STRUCTURAL WALLING

MOULD & MILDEW AT BUILDING WALLS WITH DINCEL

The growth of mould & mildew is assisted and promoted by wet building materials such as plasterboard, fibre cement sheets and wood. These conventional building materials get wet through absorption of water from concrete mix, high indoor and external humidity, condensation caused by thermal bridging, moist air leaking through the building envelope (i.e. no effective vapour barriers, wall joints and cracks), or simply by rain/ground water penetrating to the interior of the building.

Reducing the entry of moisture into the building interior is another way of controlling mould & mildew growth.

Dincel-Wall does not promote the growth of mould & mildew as moisture does not penetrate the interior, and because the polymer surface does not absorb and store moisture. Even high indoor and external humidity levels cannot damage the surface of Dincel-Wall, as the polymer surface of the wall is moisture resistant and vapour impervious. Cellulosic fibres of fibre-cement sheets (i.e. organic matters) or dust/dirt on wall surfaces provides the necessary nutrients for fungi growth on the moist wall surfaces. The surface of Dincel-Wall does not support dirt/dust and moisture to promote fungal growth.

Therefore, the areas that are normally subjected to high moisture contents such as sub-basement areas, plant rooms, garbage rooms or industrial building interiors, with Dincel-Wall it is best not to have additional finishes and left exposed. Where aesthetic appearance is important, such as laundries and bathrooms, tile/stone finish surface of Dincel-Wall is recommended.

The document **(Download – Part 2 Energy Efficiency for Building Operational Use)** provides recommendations of wall construction consisting of finishes to avoid moist air getting in contact with cold surfaces to cause condensation hence a source for moisture to promote mould and mildew. Further to this, mechanical ventilations of modern buildings have become a necessity to remove moist air. Refer Dincel website – FAQ – Sustainability Questions Nos: 11 and 12.

The two layers of minimum 2.0mm thick polymer encasement of Dincel-Wall act as a vapour barrier, in conventional construction; typically a 0.15mm thick of polyethylene sheet is used. As mentioned previously, when Dincel-Wall is filled with concrete, they act as a vapour and an air barrier. Therefore additional air and vapour barriers are not required when using Dincel-Wall.

The Dincel-Wall system incorporates a permanent rebate around the periphery of all windows and balcony doors which prevents water normally entering into conventional buildings under prevailing wind conditions or gaps occurring by thermal movement of conventional buildings. The thermal bridging is eliminated by the presence of permanent impervious polymer skins of the wall system, by lintels being an integral part of the system and also slab edges are completely covered.

TERMITES

Termites can damage primary building elements which makes the building structurally not suitable for occupancy.

Refer **(Download – Dincel Termite Barrier)** for more information.

REFERENCES

1. **Passive Design**
   http://www.yourhome.gov.au/technical/fs44.html
2. **Thermal Mass**
   http://www.yourhome.gov.au/technical/fs49.html
3. **Sub menu; Design & Construction/Thermal Performance/ Thermal Benefits of Solid Construction**
   www.concrete.net.au
4. **Design & Construction/Condensation/Condensation – Design Strategies**
   www.concrete.net.au – Sub menu
5. **Moisture, Mould & Mildew**
   http://www.epa.gov/iaq/largebldgs/pdf_files/appenc.pdf
6. **Insulated Concrete Walls Save Energy by John Gajda**
   www.cement.org/ Search for CD026 for document titled "Thermal Mass Comparison of Wall Systems"
7. **A comprehensive series concerning "Sick Building Syndrome" and "Building Related Illness" pertaining to People in the Building Marketplace by W. Curtis White**
8. **Factors Affecting Indoor Air Quality**
   http://www.epa.gov/iaq/largebldgs/pdf_files/sec_2.pdf
9. **Mould: Causes, Health Effects and Clean-up. Building Science Research Report – 0211**
   http://www.buildingscience.com/documents/reports/rr-0211-mold-causes-health-effects-and-clean-up/view?topic=doctypes/reports
10. **Dampness and Mould – World Health Organisation Guidelines For Indoor Air Quality**
    http://www.euro.who.int/__data/assets/pdf_file/0017/43325/E92645.pdf

DINCEL CONSTRUCTION SYSTEM PTY LTD ABN. 78 083 839 614
101 QUARRY ROAD, ERSKINE PARK, NSW 2759, AUSTRALIA
TEL: +61 2 9670 1633 | FAX: +61 2 9670 6744
EMAIL: CONSTRUCTION@DINCEL.COM.AU | WWW.DINCEL.COM.AU

DINCEL STRUCTURAL WALLING